KLAFS
MY SAUNA AND SPA

Circuit- and Installation diagram

for

Sauna Control unit 18029

with one heater
-9 kW

Edition: 14.06.2012
50701180

Connecting clamp in control unit 18029

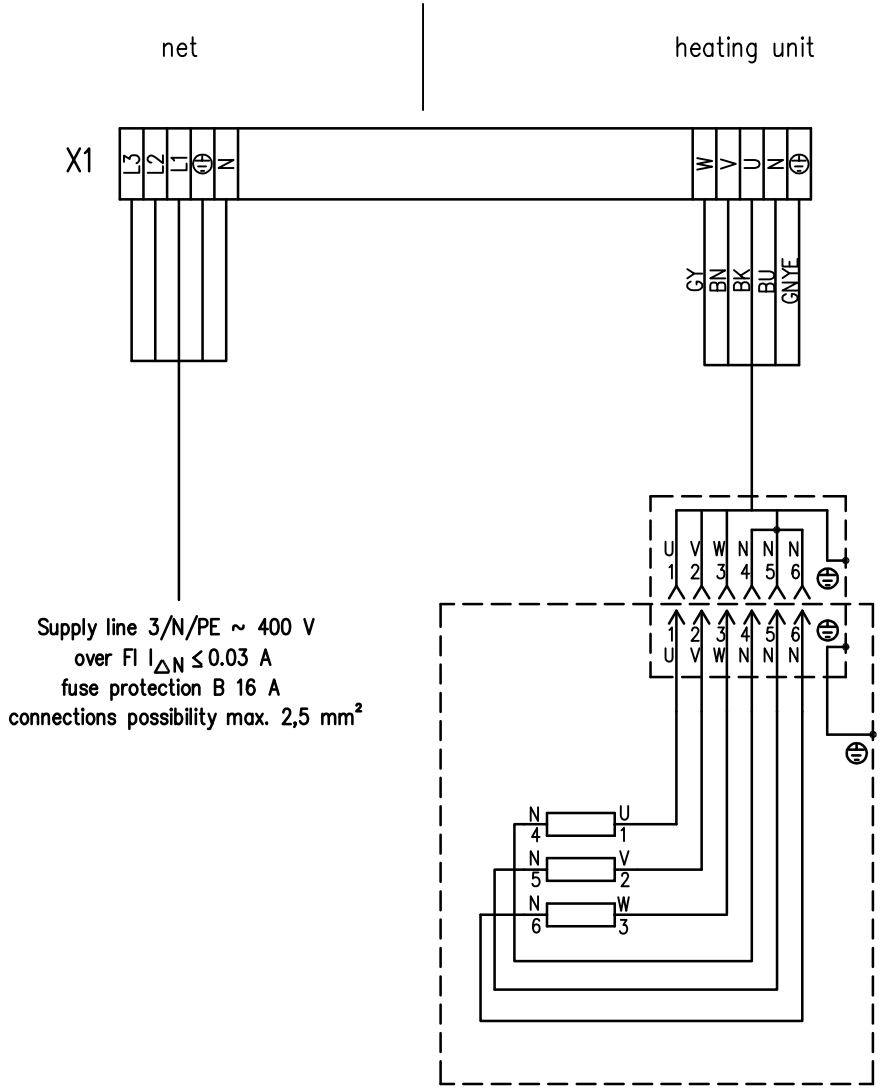

Supply line 3/N/PE ~ 400 V
over FI $I_{\Delta N} \leq 0.03$ A
fuse protection B 16 A
connections possibility max. 2,5 mm²

heating unit Majus, Bonatherm VS
and Pluris ≤ 9 kW

				Datum	27.4.2010	Layout diagram		KLAFS Erich-Klafs-Str. 1-3 74523 Schwäbisch Hall	Sauna	Control unit 18029	=
				Bearb.	VHerr						+
				Gepr.							
Index	Änderung	Datum	Name	Norm		Urspr.	Ers.f.	Ers.d.		50701180	Blatt 1 von 6 Bl

Connecting clamp in control unit 18029

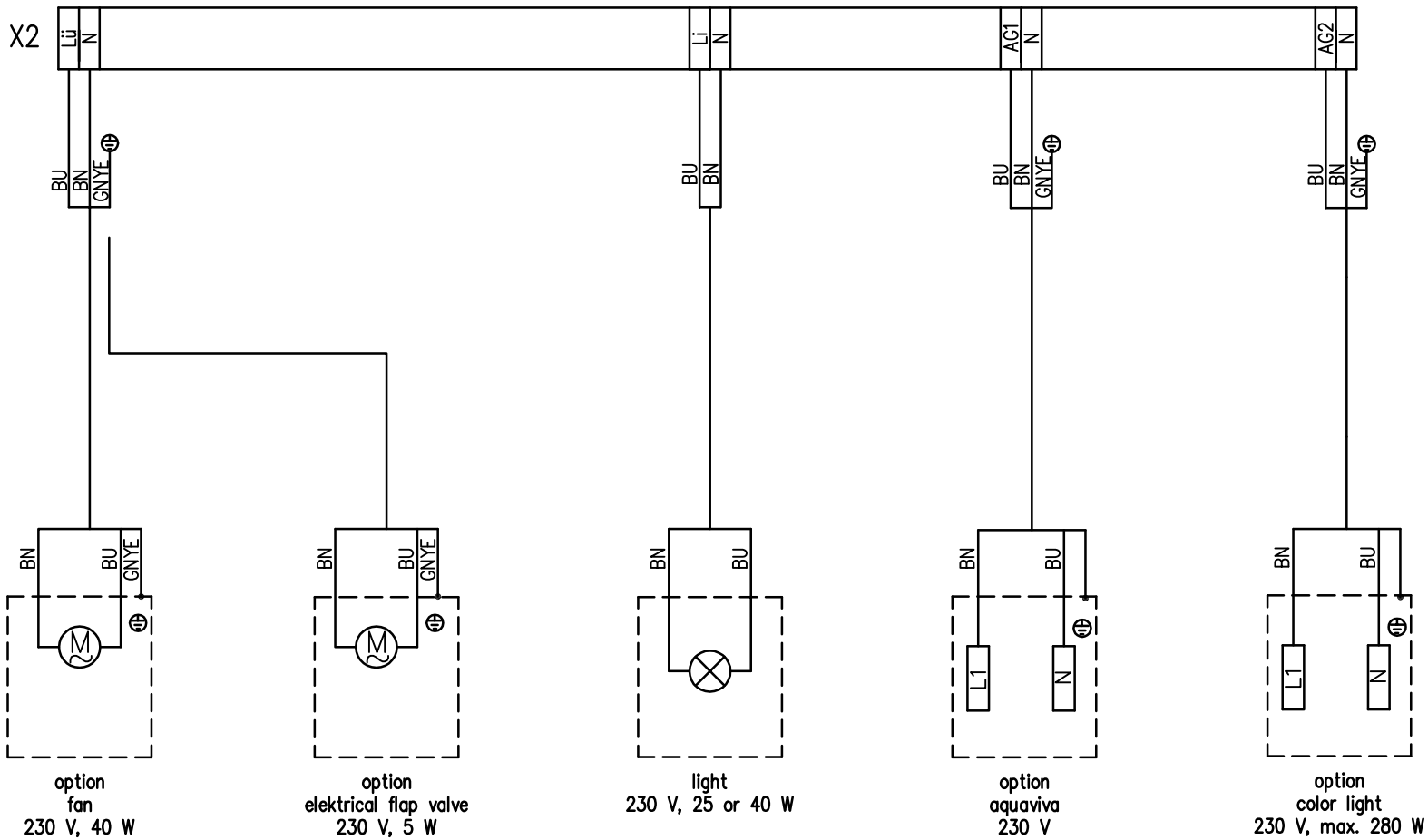

Warning !
exit 1 + light + fan = max. 280 W

				Datum	27.4.2010	Layout diagram		KLAFS Erich-Klafs-Str. 1-3 74523 Schwäbisch Hall	Sauna	Control unit 18029	=
				Bearb.	VHerr						+
				Gepr.							
Index	Änderung	Datum	Name	Norm		Urspr.	Ers.f.	Ers.d.		50701180	Blatt 2 von 6 Bl

Connecting clamp in control unit 18029

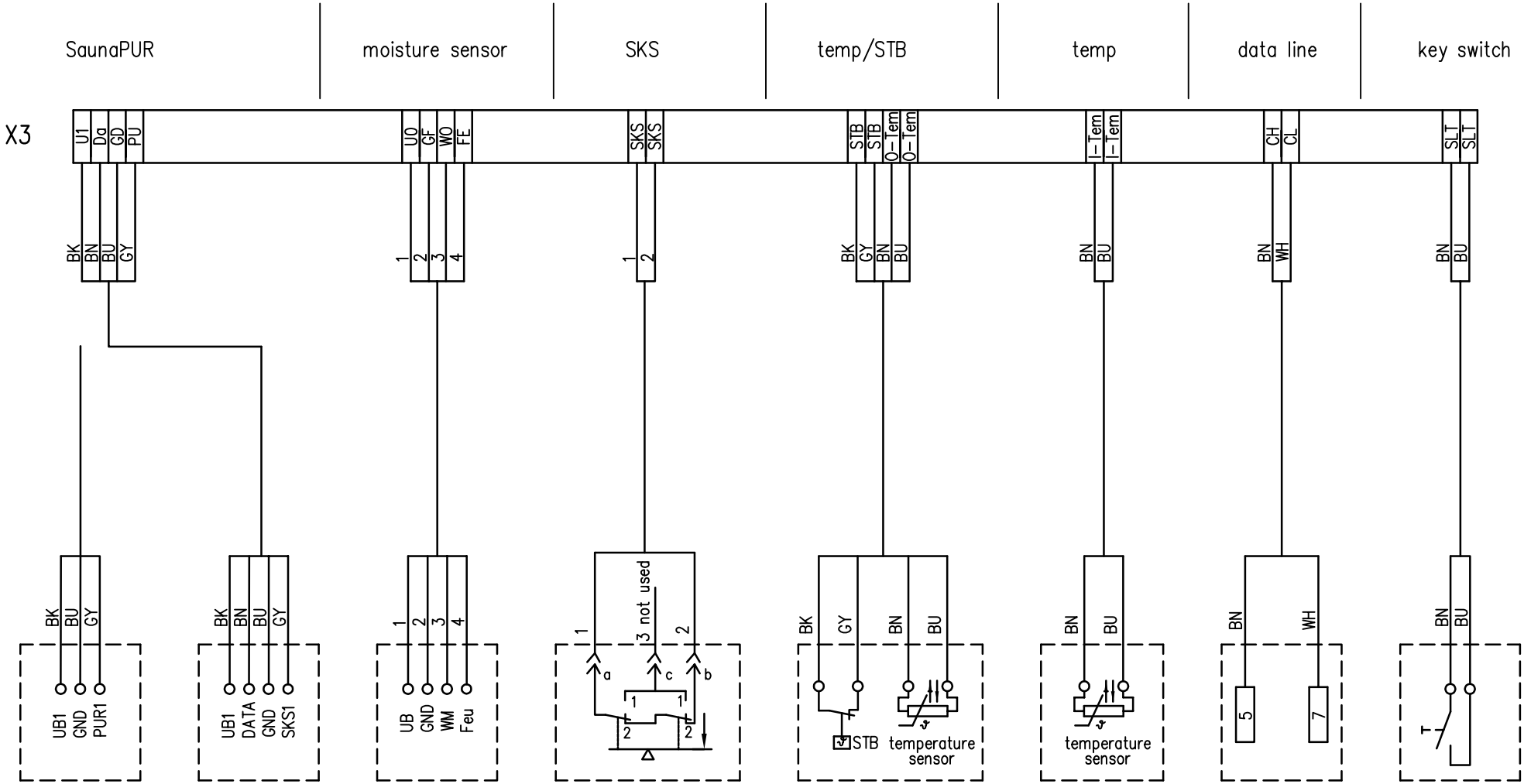

				Datum	27.4.2010	Layout diagram	KLAFS Erich-Klafs-Str. 1-3 74523 Schwäbisch Hall	Sauna	Control unit 18029	=	
				Bearb.	VHerr					+	
a	PUR1	14.06.12	PA	Gepr.					50701180	Blatt 3	
Index	Änderung	Datum	Name	Norm		Urspr.	Ersf.	Ersd.		von 6 Bl	

Connecting clamp in control unit 18029

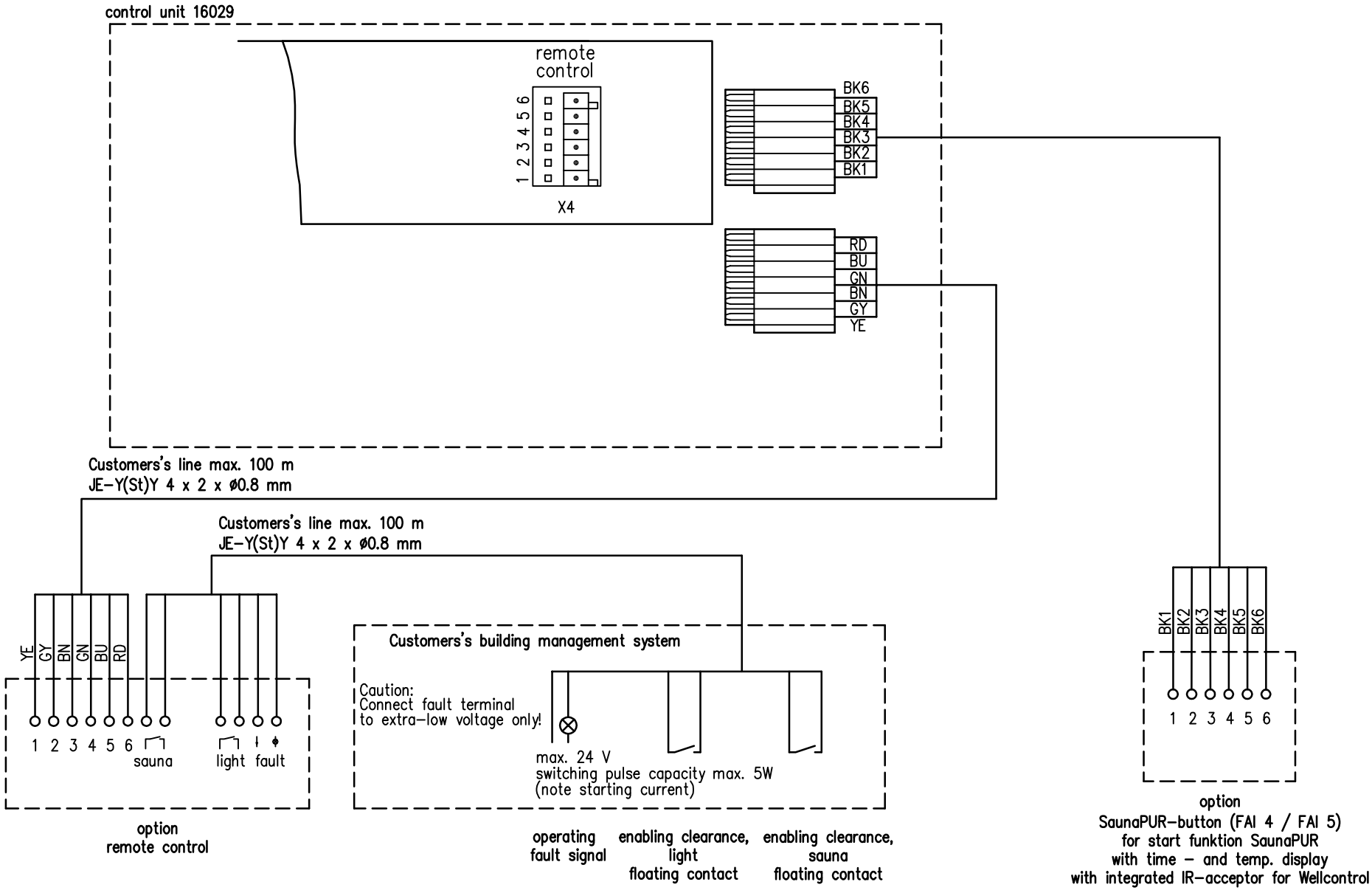

				Datum	27.4.2010	Layout diagram		KLAFS Erich-Klafs-Str. 1-3 74523 Schwäbisch Hall	Sauna	Control unit 18029	=
				Bearb.	VHerr						+
				Gepr.							
Index	Änderung	Datum	Name	Norm		Urspr.	Ers.f.	Ers.d.		50701180	Blatt 4 von 6 Bl

Installation diagram for Klafs–Sauna–technik with Majus and Pluris heating units

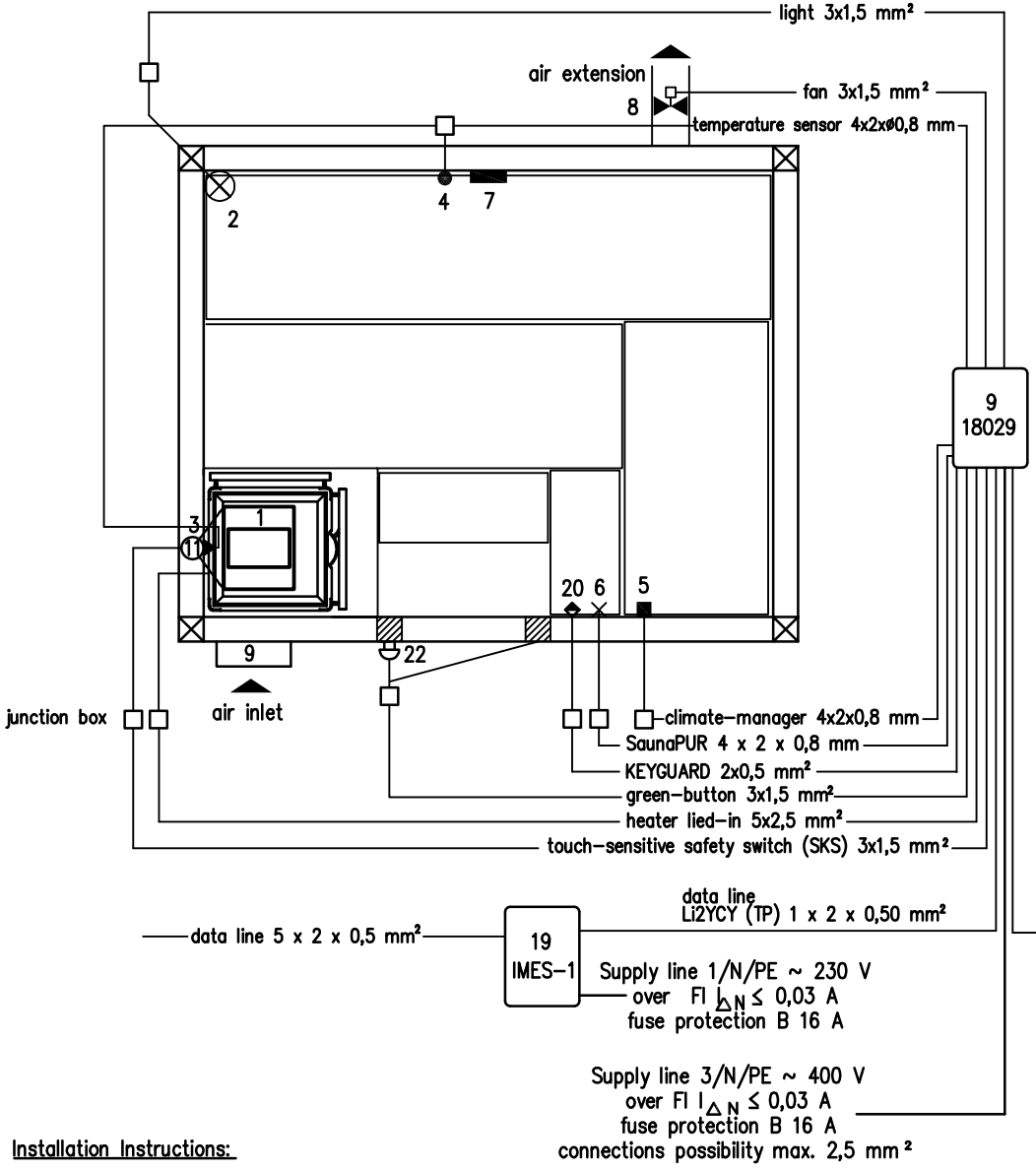

Legend:

1 = Heating unit
2 = Light
3 = Temperature sensor temp/STB
height = 0.10 m below sauna ceiling (middle of the housing)
The limiter unit is mounted at 2.10 m when
the sauna is higher than 2.20 m.
4 = Temperature sensor Temp
height = 0.15 m below sauna ceiling (middle of the housing),
The limiter unit is mounted at 2.10 m when
the sauna is higher than 2.25 m.
5 = Climate–manager (option)
height = 1.38 m top edge housing above finished floor
Min. distance from steam inlet: 1 m!
6 = SaunaPUR with time – and temp. display
and integrated IR–acceptor of remote control
7 = Thermometer
height = 0.15 m below sauna ceiling (middle of the housing)
8 = Fan / elektrical flap valve 230 V (option)
9 = Control unit 18029
Height 1.65 m above finished floor level (centre of display).
11 = touch–sensitive safety switch (SKS) (option)
12 = Remote Control (option)
19 = IMES–1 (option)
20 = KEYGUARD (option)
22 = Green–button (option)

Installation Instructions:

Minimum distances as indicated on the heater warning sign has to be definitely respected!

Important!

All electric cables inside the sauna have to be silicone coated!
In case of external control unit, junction boxes have to be installed close to the sauna cabin for the transition of NYM–cables to silicon cables.
In order to determine the cable cross–section, cable length and ambient temperature (acc. to VDE 0100 part 430 and 523) have to be respected..
Ambient temperature plant room 0°C – 40°C.
Air humidity max. 80 % RH.
If the control unit is not installed within visual range of the cabin door, standard EN 60335 (requirements for telecontrol) has to be respected.

				Datum	27.4.2010	Installation diagram Majus, Pluris		KLAFS Erich–Klafs–Str. 1–3 74523 Schwäbisch Hall	Sauna	Control unit 18029	=
				Bearb.	VHerr						+
				Gepr.							
Index	Änderung	Datum	Name	Norm		Urspr.	Ers.f.	Ers.d.		50701180	Blatt 5 von 6 Bl

Installation diagram for Klafs–Sauna–technik with Bonatherm heating unit

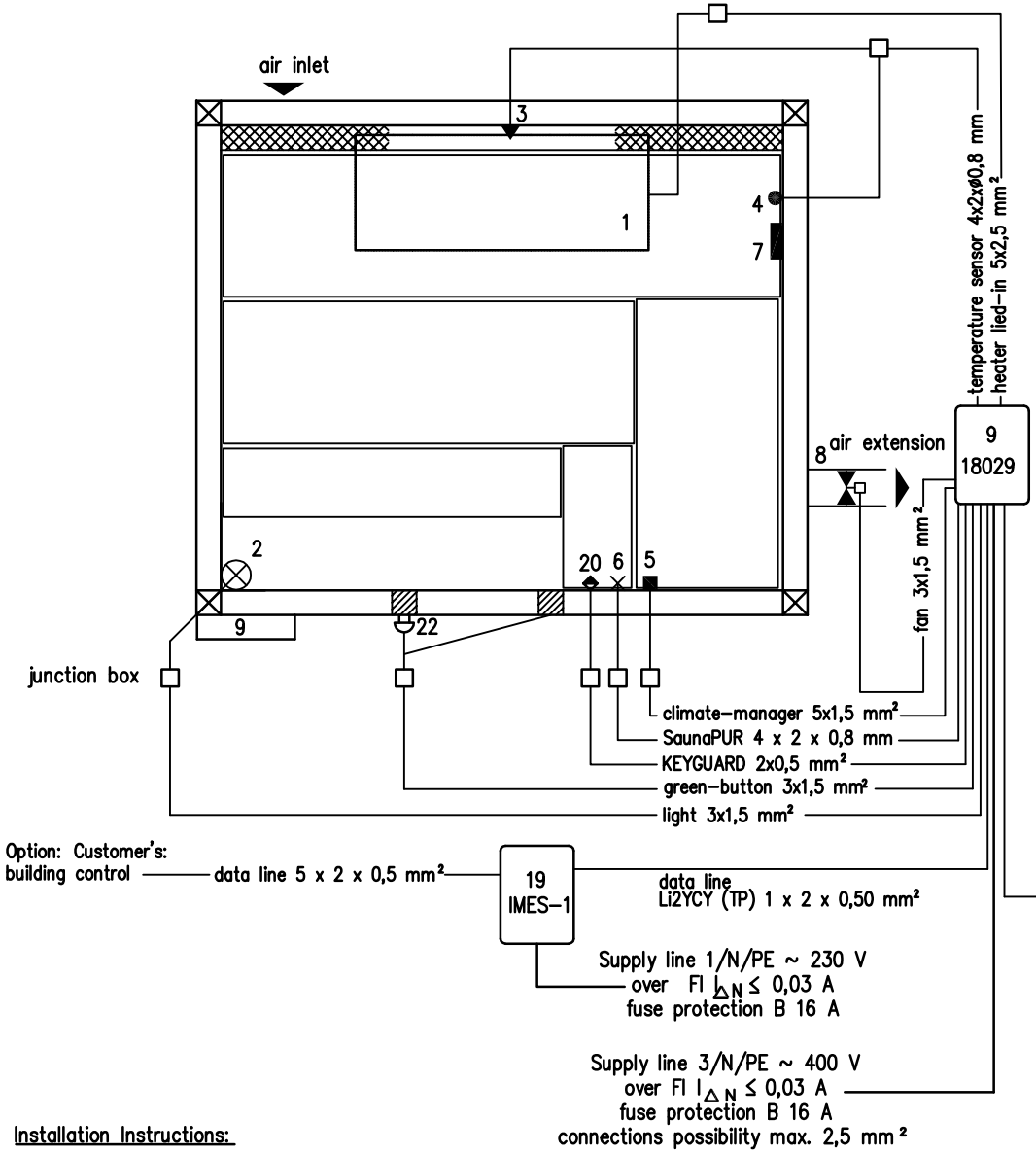

Legend:

1 = Heating unit
2 = Llight
3 = Temperature sensor temp/STB
height = 0.10 m below grille hot air canal
centric above heating unit (middle of the housing)
4 = Temperature sensor Temp
height = 0.15 m below sauna ceiling (middle of the housing),
The limiter unit is mounted at 2.10 m when
the sauna is higher than 2.25 m.
5 = Climate–manager (option)
height = 1.38 m top edge housing above finished floor
Min. distance from steam inlet: 1 m!
6 = SaunaPUR with time – and temp. display
and integrated IR–acceptor of remote control
7 = Thermometer
height = 0.15 m below sauna ceiling (middle of the housing)
8 = Fan / elektrical flap valve 230 V (option)
9 = Control unit 18029
Height 1.65 m above finished floor level (centre of display).
12 = Remote Control (option)
19 = IMES–1 (option)
20 = KEYGUARD (option)
22 = Green–button (option)

Installation Instructions:

Minimum distances as indicated on the heater warning sign has to be definitely respected!

Important!

All electric cables inside the sauna have to be silicone coated!
In case of external control unit, junction boxes have to be installed close to the sauna cabin for the transition of NYM–cables to silicon cables.
In order to determine the cable cross–section, cable length and ambient temperature (acc. to VDE 0100 part 430 and 523) have to be respected..
Ambient temperature plant room 0°C – 40°C.
Air humidity max. 80 % RH.
If the control unit is not installed within visual range of the cabin door, standard EN 60335 (requirements for telecontrol) has to be respected.

				Datum	27.4.2010	Installation diagram Bonatherm	KLAFS Erich–Klafs–Str. 1–3 74523 Schwäbisch Hall	Sauna	Control unit 18029	=	
				Bearb.	VHerr					+	
				Gepr.							
Index	Änderung	Datum	Name	Norm		Urspr. / Ersf.	Ers.d.		50701180	Blatt 6 von 6 Bl	